UNIVERSITY OF ILLINOIS
AT URBANA-CHAMPAIGN

Engineering Law

Professor Barich

Class 10

illinois.edu

Announcements

- Exam #2 – Second half of today's class
  - Questions about Exam #2 after lecture
  - Review Exam next class

© Joe Barich, 2018.

Intellectual Property

- What is Intellectual Property (IP)?
  - Broad term encompassing many rights that are very different
  - May be embodied in a physical object, but the right itself is intangible
  - So important that two types of IP (now called © and patent) are in the Constitution itself
    - Article 1, Sec 8, Cl. 8
    - To promote the Progress of Science and useful Arts, by securing for limited Times to Authors and Inventors the exclusive Right to their respective Writings and Discoveries

© Joe Barich, 2018.

Intellectual Property - 2

- But what is it?
- It's a right granted to you by the government, the extent and scope of the right is as determined by statute
- The scope changes as new laws are passed (IP laws frequently change in scope)
- New IP rights can be added at any time (and are)
- Compare with legal rights of "privacy" and "to bear arms"
  - The constitution/statute (and how it is interpreted) sets the extent of your right

© Joe Barich, 2018.

Where did IP Come From?

- Before IP
  - Important discoveries were kept secret so that you (and your heirs or apprentices) could profit from them
  - Advanced medical techniques
    - Egyptian brain surgery from 3000 BC
  - Color formulations of Roman painters
  - Metallurgy, construction, agriculture, etc.
- Often the discovery was lost!
  - No net societal advancement
  - No propagation throughout society

© Joe Barich, 2018.

Lost Technology -1

- Antikythera mechanism ~200 BCE
  - Analog computer - simultaneous calculation of the position of the Sun and Moon, the moon phase, eclipse, and calendar cycles, and locations of some planets
  - Not equaled until the 1400s

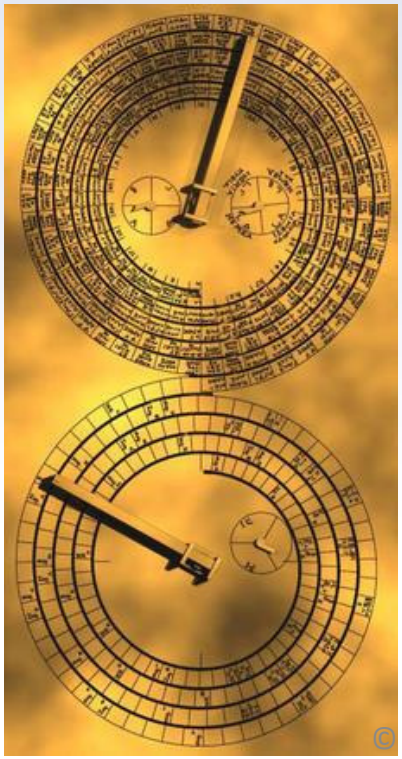

© Joe Barich, 2018.

Lost Technology -2

- Hero/Heron of Alexandria ~ 100 CE
  - Steam engine, wind powered machinery, vending machine, automated doors, programmable cart (rope), water pumps, water-leveled surveying device, syringe

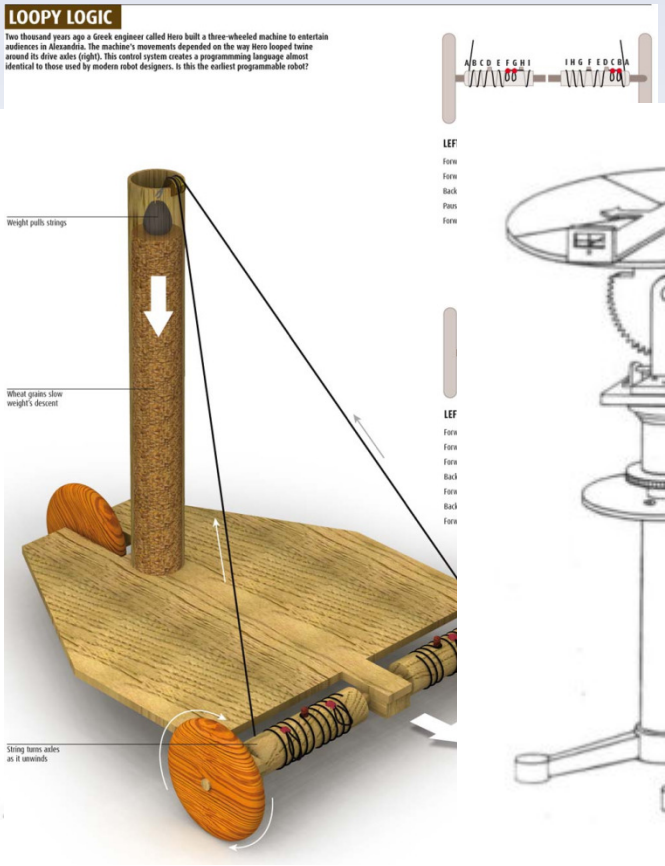

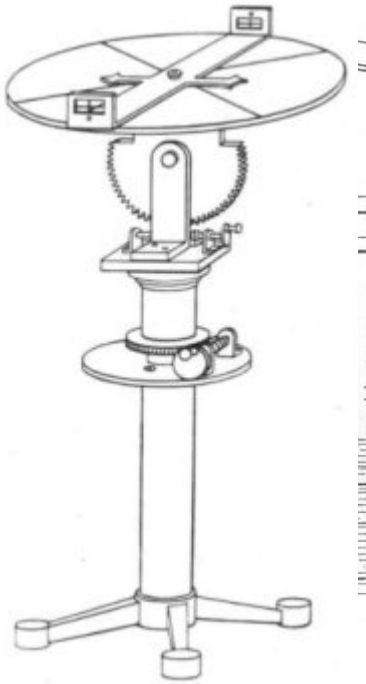

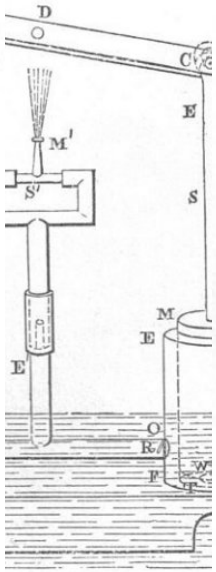

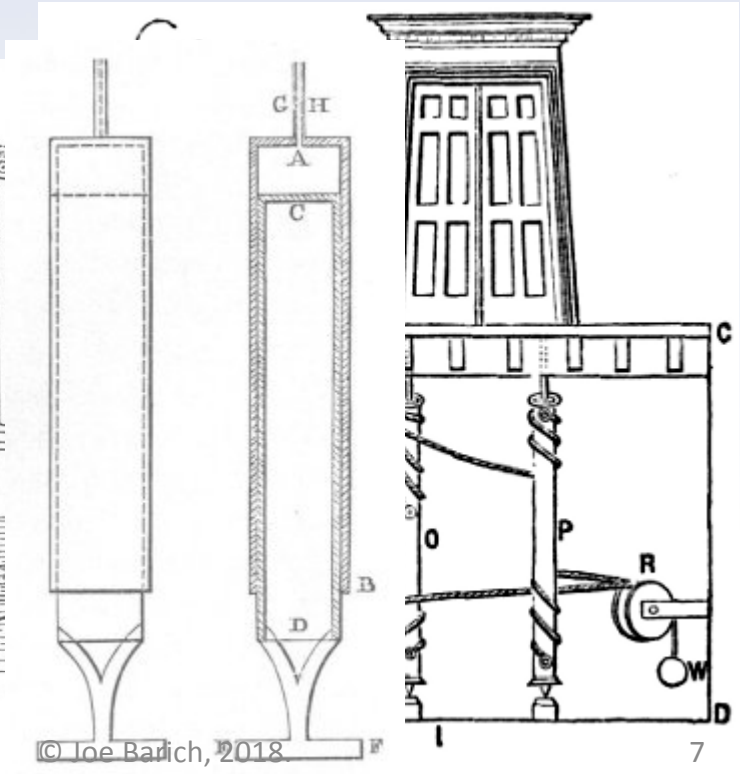

© Joe Barich, 2018

"*Ad hoc*" Rights

- Individual "*ad hoc*" rights (up to 1600s)
  - King can give anyone an exclusive right for any reason
    - Called "Letters Patent" meaning (approximately) "public grant of rights"
    - Could be the sole right to perform a service or sell a product
  - Ex - "Letters Patent" to be exclusive toll taker on a bridge
  - If someone invented something great, they might petition the king for "letters patent" granting them the exclusive right to make and sell the invention – often in exchange for a percentage to the king

© Joe Barich, 2018.

Need For An Economic Solution

- Then: Only secrecy allows the inventor to profit, but a solution is needed to align individual financial incentive with societal gain
- Venetian Patent Statute (1474)
  - "We have among us men of great genius, apt to invent and discover ingenious devices…if provision were made for the works and devices discovered by such persons, so that others who may see them could not build them and take the inventor's honor away, more men would then apply their genius, would discover, and would build devices of great utility and benefit to our Commonwealth."
- Give an exclusive right and get more inventions
- But! - Exclusive rights for only a limited time – then everyone can use the invention
  - Incentive to disclose invention and once everyone knows it, it can't be lost with inventor's death, but the inventor still gets to profit and no longer has to worry about theft of idea

© Joe Barich, 2018.

IP Rights - 1

- "Big 3"
  - Patents - (P)
    - Functionality
    - How something works
  - Copyrights - ©
    - Expression
    - What something looks like, sounds like, etc.
  - Trademarks – TM, ®
    - Origin of goods in trade
    - Who a product comes from
  - Can have (P), © and TM/® in same product
  - Many other IP rights

© Joe Barich, 2018.

IP Rights - 2

- Patents, Copyrights and Trademarks operate very differently
  - Rules for one typically do not apply to the others
  - Term “IP” is a very loose grouping
- Massive misunderstanding and confusion
  - Most businesses do not understand IP rights
  - Popular press often gets it wrong
  - But! Estimate of value of IP held by SP500 is in excess of $4 trillion

© Joe Barich, 2018.

US vs. Rest of World

- IP - Intellectual Property vs. Industrial Property
  - Product of the mind vs. company property
  - Historically, US economic development was dominated by entrepreneurs - Europe was dominated by large, state-run industry
  - Until recently, only a company could apply for patents in Europe and many other countries
  - Many differences in IP scope due to fundamental principles
    - More things are patentable in the US
    - Ex – EU = no surgical procedure patents and stricter standards for software patents

© Joe Barich, 2018.

Patent Economic Basis

- A Patent is not a reward or a prize
  - The IP system is not made for the benefit of the inventors – it is made for the benefit of society
  - Want to incentivize development of new inventions for everyone's benefit
  - It's a savvy deal – govt. can get private industry to pay for R&D instead of having to pay for it with tax dollars
    - Ex – It costs $1 Billion+ for new drug
    - R&D yearly spend in trillions - $0 to taxpayer
      - Although some govt. research grants in some cases
- Limited time of exclusivity, then everyone can use it for free – don't want to pay a premium? Just wait a few years
  - Exclusivity gives inventors confidence that their investment will pay off – otherwise no investment!

© Joe Barich, 2018.

TM and © Economic Basis

- Trademark
  - We want consumers to know who makes the goods they are buying so that the manufacturer will make high-quality goods and stand behind them
  - Want to be sure consumers are not deceived into purchasing inferior goods once manufacturers have made that investment
    - No "passing off", "counterfeiting", "knock-offs"
- Copyright
  - Everyone likes a new story or song! We want more.
  - For artistic works requiring large investment (movies), exclusive rights incentivize production
    - No one would invest $100M otherwise

© Joe Barich, 2018.

Trends in IP - 1

- Huge lobbying to increase value of rights
- Some rights are getting longer
  - Copyrights from 14 to life+70 or 120 years
  - Patents = 7->14->21->17->20 years in length
  - TMs have always been for as long as used
- © and TM are getting more expansive
  - "Make available for copying" as infringement in 2010 vs. "time shifting" is OK in 1979
  - "Fair use" vs. "encryption circumvention"
  - TM dilution and famous marks

© Joe Barich, 2018.

Trends in IP - 2

- Patents are often company vs. company while © and TM are often big company vs. small person
- Huge lobbying in the IP area
  - Expansion of rights are constrained when one company lobbies for expansion and another lobbies against
  - But! People have no lobbyists
  - Ex - $675K fine for downloading songs that would cost under $1 on iTunes
    - Would have gotten far less punishment if they had just shoplifted. Fine is far in excess of any reasonable value of the data copied

© Joe Barich, 2018.

IP Not Like Contracts or Torts

- Different basis than contract or tort law
  - Contracts and torts
    - Emerges from basic principles of fairness
    - Reasonableness
    - Slow to change
    - Highly jury dependent
    - Damages based on actual damages from breach
  - IP
    - Economic tool to drive societal development
    - Completely a creation of the statute
    - Does not have to be reasonable
    - Can have statutory damages
    - Much more change than contract or tort law

© Joe Barich, 2018.

IP Law Changes Often

- Patents, Copyrights and TMs will continue to be around, but they change all the time
  - Federal statute changes
    - Example – Sept 2011 America Invents Act (AIA) – biggest patent law change since Patent Act in 1952
  - Agency rule changes
  - Court cases interpreting the law
- We will just be scratching the surface
  - This course will not make you an expert
  - There are many exceptions to most rules
  - Consult a lawyer if you have an issue

© Joe Barich, 2018.

- Questions?

Remember to bring Coursepack next time

(or copies of patents, applications, and design patents from joebarich.com)

© Joe Barich, 2018.